HEAD PROFILE

BOLTED (K. D.) FLUSH OR PROJECTED ☐

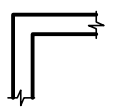

FLUSH WELDED ☐

BOLTED/BACK WELDED W/ HAIRLINE SEAM ☐

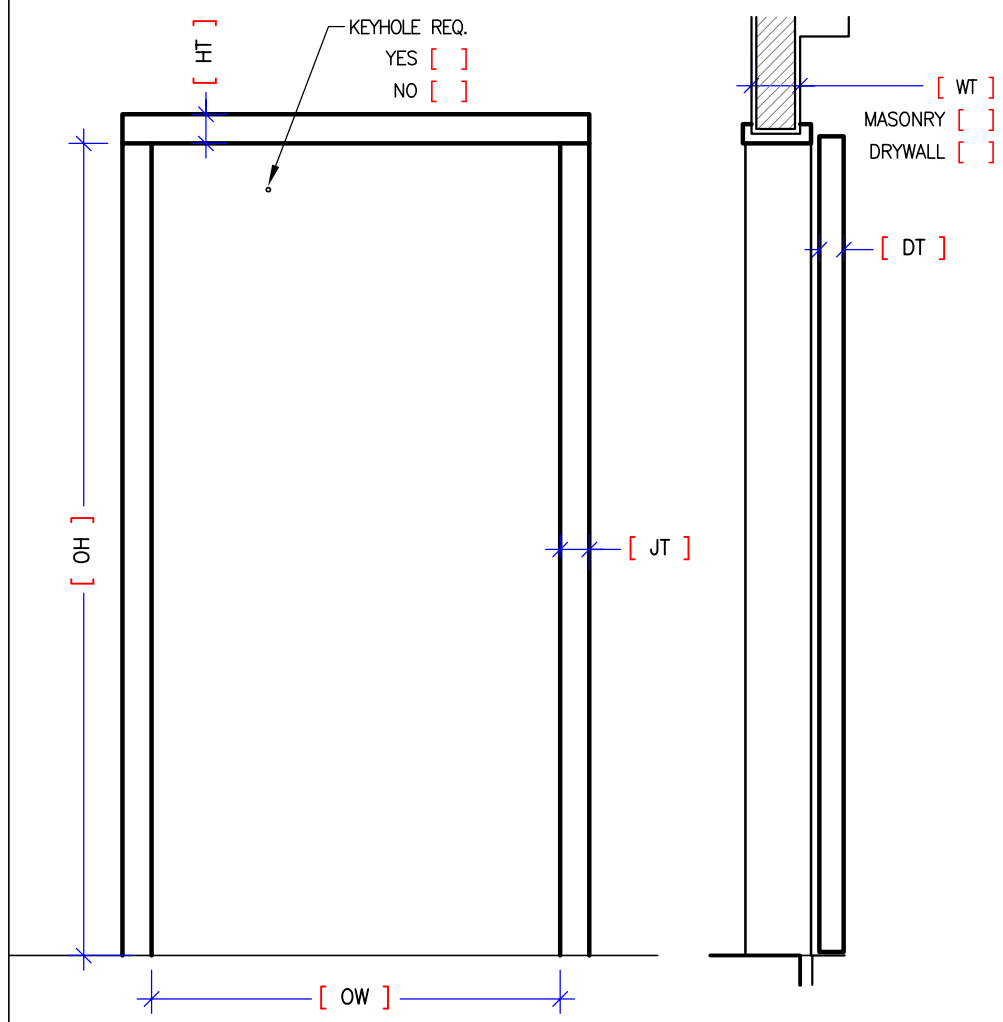

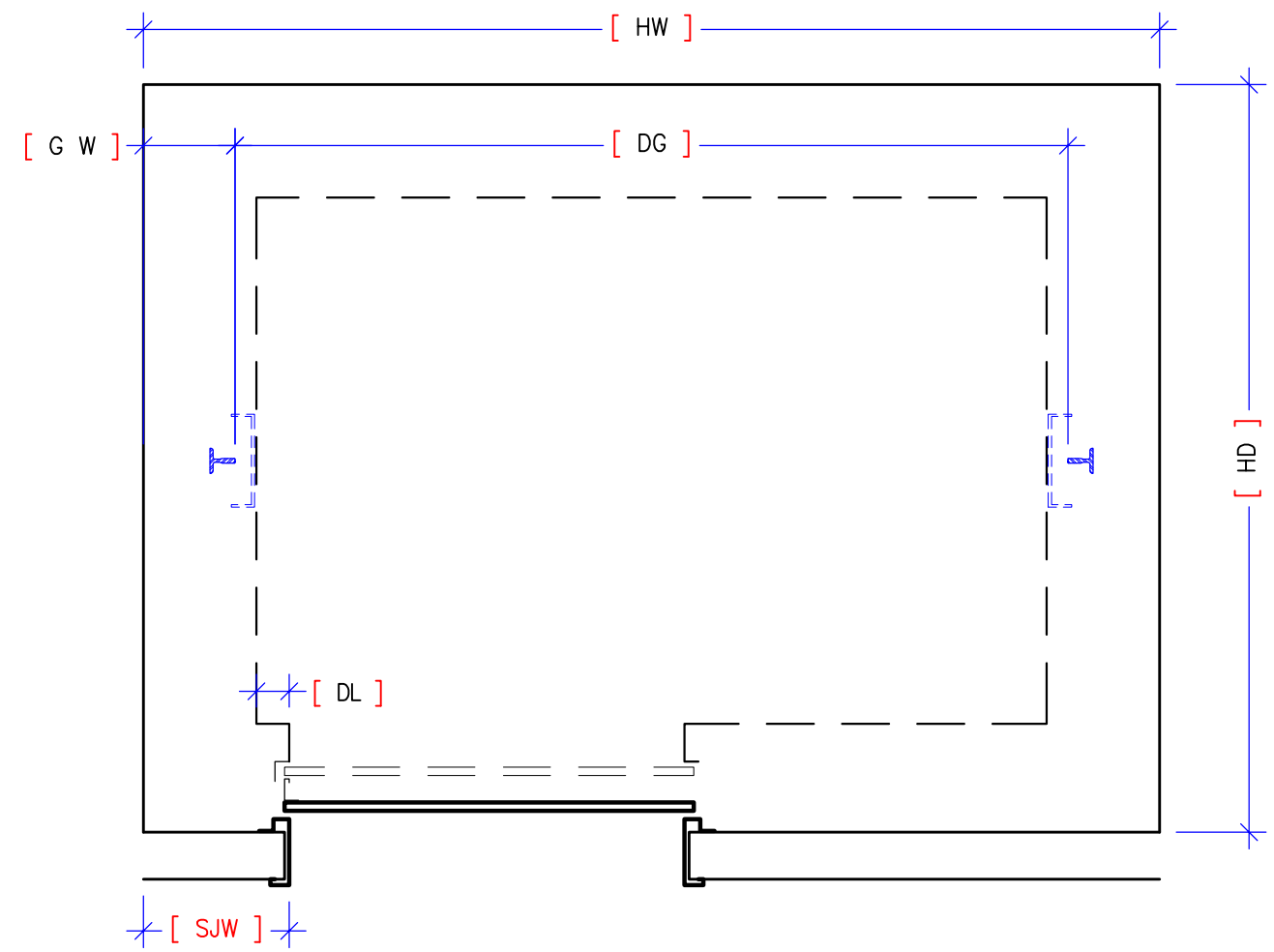

TRAVEL DISTANCES
(IF MORE THAN 12 PROVIDE TABLE)

TOTAL TRAVEL	
FLOOR DESIGNATION	FLOOR TO FLOOR HEIGHT
TOP	
PIT	

GENERAL SPECIFICATIONS AND DATA

JOB NAME:	
SHAFT NAME:	
DOOR OPERATOR:	GAL ☐ MAC ☐ OTIS ☐ OTHER ☐ _____

OPENING HEIGHT	[OH]	=	_____
OPENING WIDTH	[OW]	=	_____
JAMB TRIM	[JT]	=	_____
HEAD TRIM	[HT]	=	_____
WALL THICKNESS	[WT]	=	_____
DOOR THICKNESS	[DT]	=	_____

HOISTWAY DEPTH	[HD]	=	_____
HOISTWAY WIDTH	[HW]	=	_____
DISTANCE BETWEEN GUIDES	[DG]	=	_____
GUIDE TO WALL	[GW]	=	_____
STRIKE JAMB TO WALL	[SJW]	=	_____
DAYLIGHT	[DL]	=	_____

QUANTITY	DOOR HAND LEFT H	DOOR HAND RIGHT H	ENTRANCE/DOOR FINISH	
			☐ BAKED ENAMEL	BAKED PRIME ☐
			☐ S/ST # 4	S/ST MIRROR ☐
			☐ BRONZE	OTHER ☐
HALL FIXTURES	YES ☐	DIM		
VISION GLASS	YES ☐	DIM		

SILL	ALUM. ☐	BRZ. ☐	S/ST ☐	WHT. BRZ (NICKEL SILVER) ☐

JAMB PROFILE

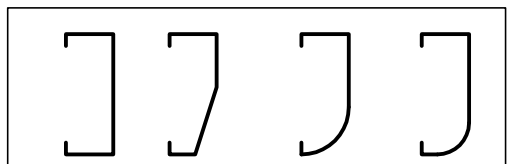

SQUARE ☐ SPLAY ☐ BULLNOSE ☐ RADIUS ☐

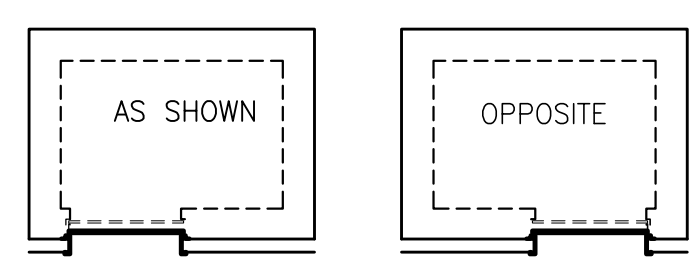

☐ LH RH ☐

COLUMBIA ELEVATOR

ENTRANCE SURVEY

SINGLE SPEED OPENING

HEAD PROFILE

BOLTED (K. D.) FLUSH OR PROJECTED ☐

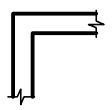

FLUSH WELDED ☐

BOLTED/BACK WELDED W/ HAIRLINE SEAM ☐

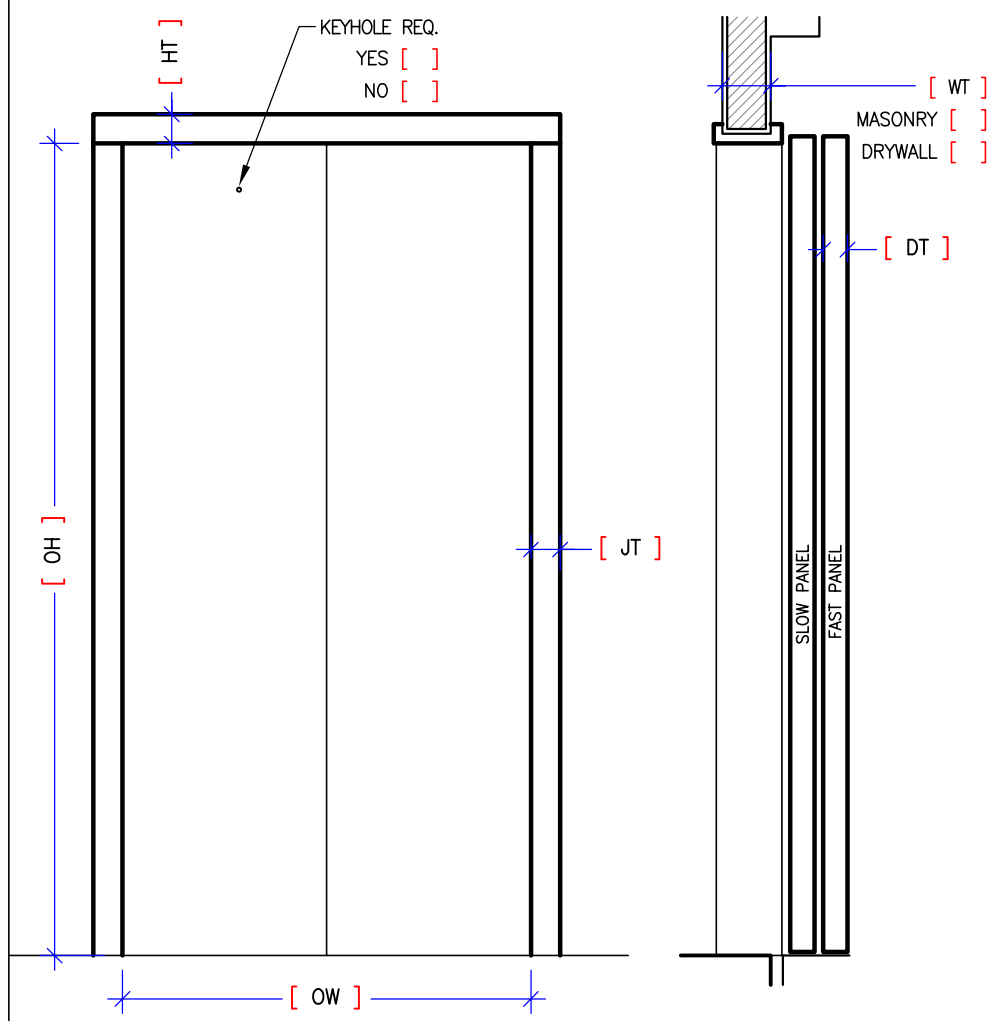

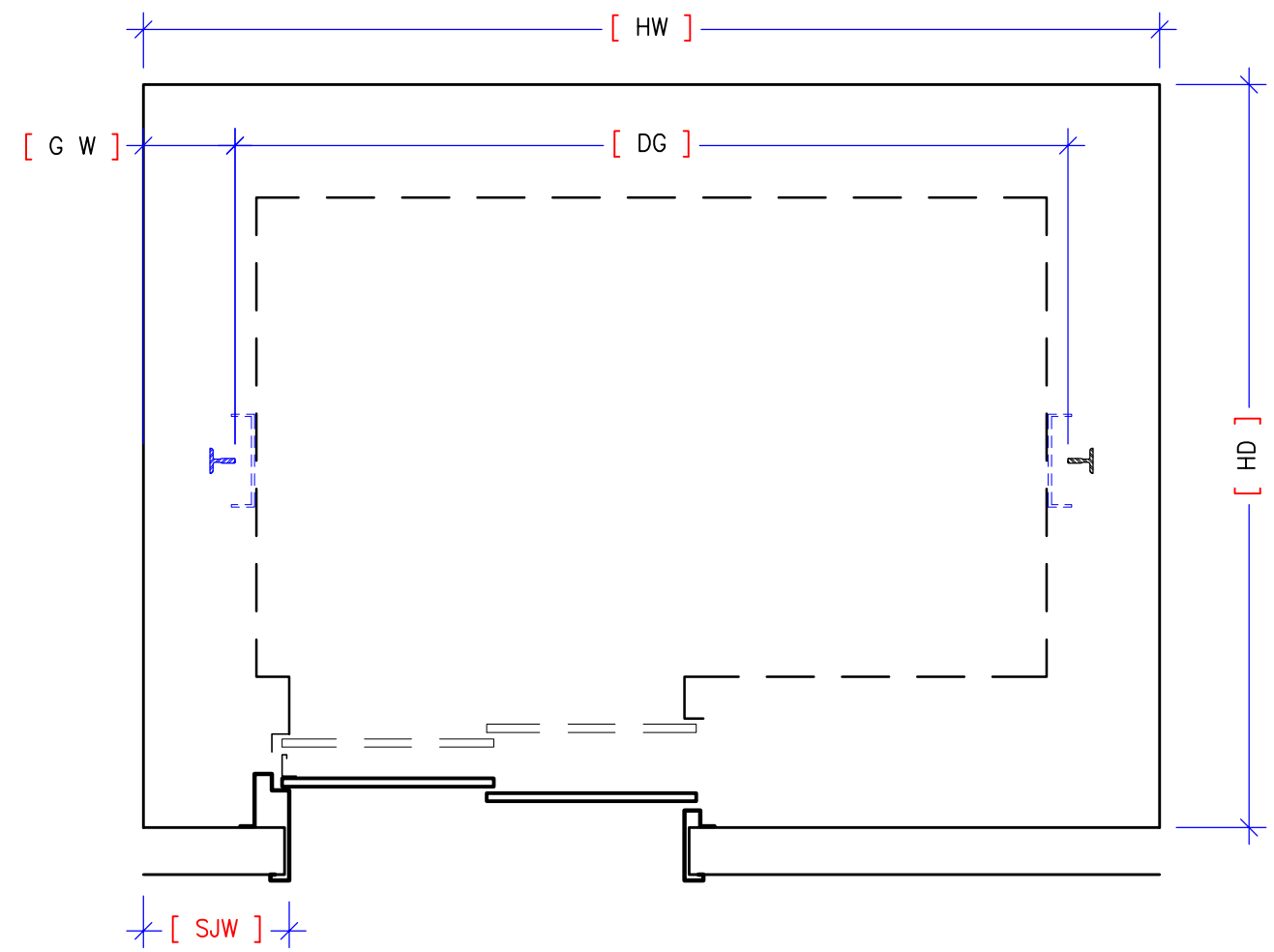

TRAVEL DISTANCES
(IF MORE THAN 12 PROVIDE TABLE)

TOTAL TRAVEL	
FLOOR DESIGNATION	FLOOR TO FLOOR HEIGHT
TOP	
PIT	

GENERAL SPECIFICATIONS AND DATA

JOB NAME:	
SHAFT NAME:	
DOOR OPERATOR:	GAL ☐ MAC ☐ OTIS ☐ OTHER ☐ _____

OPENING HEIGHT	[OH]	=	_____
OPENING WIDTH	[OW]	=	_____
JAMB TRIM	[JT]	=	_____
HEAD TRIM	[HT]	=	_____
WALL THICKNESS	[WT]	=	_____
DOOR THICKNESS	[DT]	=	_____

HOISTWAY DEPTH	[HD]	=	_____
HOISTWAY WIDTH	[HW]	=	_____
DISTANCE BETWEEN GUIDES	[DG]	=	_____
GUIDE TO WALL	[GW]	=	_____
STRIKE JAMB TO WALL	[SJW]	=	_____
DAYLIGHT	[DL]	=	_____

QUANTITY	DOOR HAND LEFT H	DOOR HAND RIGHT H	ENTRANCE/DOOR FINISH	
			☐ BAKED ENAMEL	BAKED PRIME ☐
			☐ S/ST # 4	S/ST MIRROR ☐
			☐ BRONZE	OTHER ☐
HALL FIXTURES	YES ☐	DIM		
VISION GLASS	YES ☐	DIM		

SILL	ALUM. ☐	BRZ. ☐	S/ST ☐	WHT. BRZ (NICKEL SILVER) ☐

JAMB PROFILE

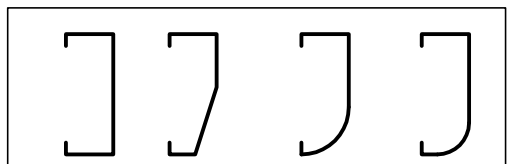

SQUARE ☐ SPLAY ☐ BULLNOSE ☐ RADIUS ☐

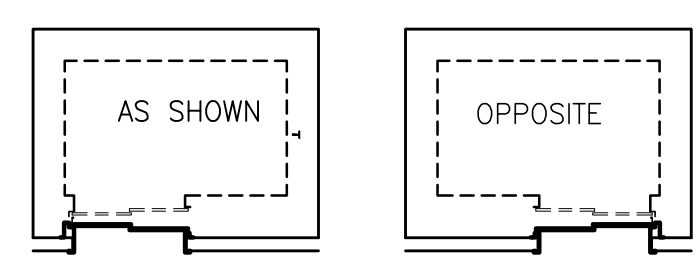

☐ LH RH ☐

COLUMBIA ELEVATOR

ENTRANCE SURVEY

TWO SPEED OPENING

HEAD PROFILE

BOLTED (K. D.) FLUSH OR PROJECTED ☐

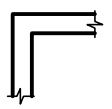

FLUSH WELDED ☐

BOLTED/BACK WELDED W/ HAIRLINE SEAM ☐

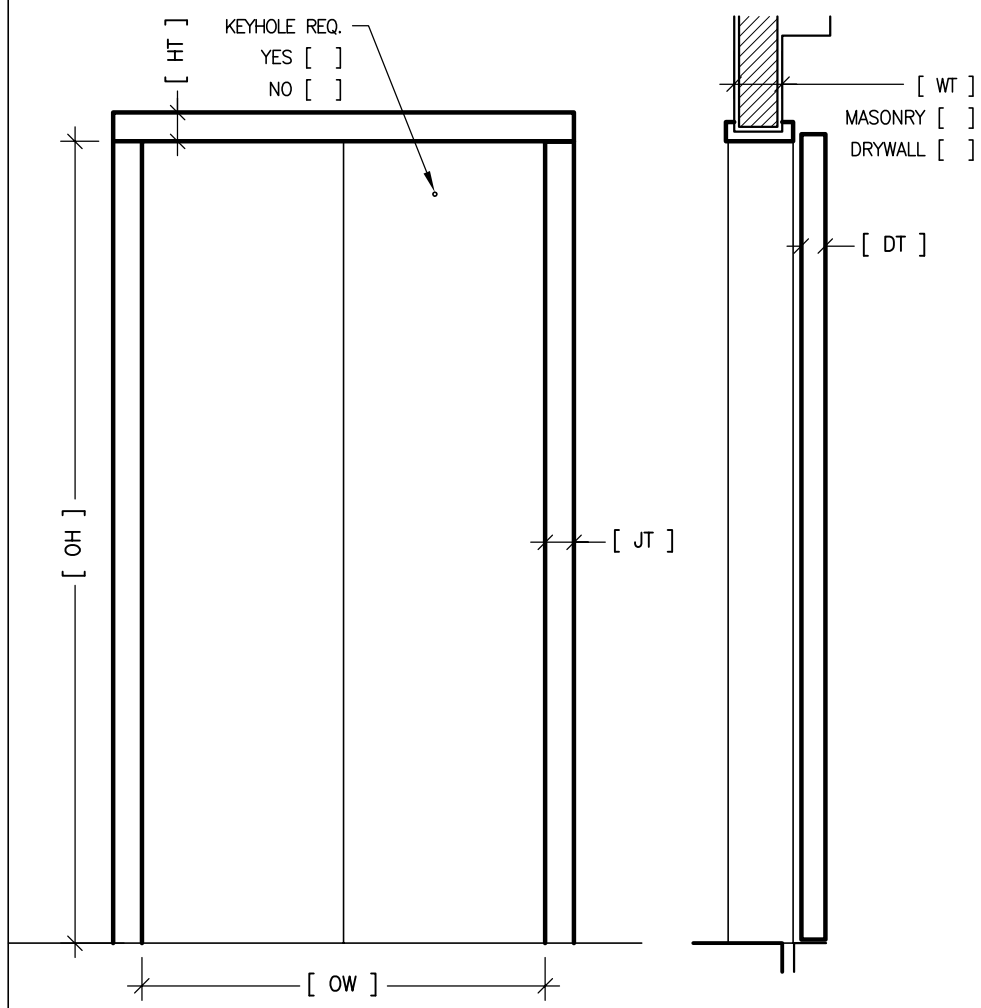

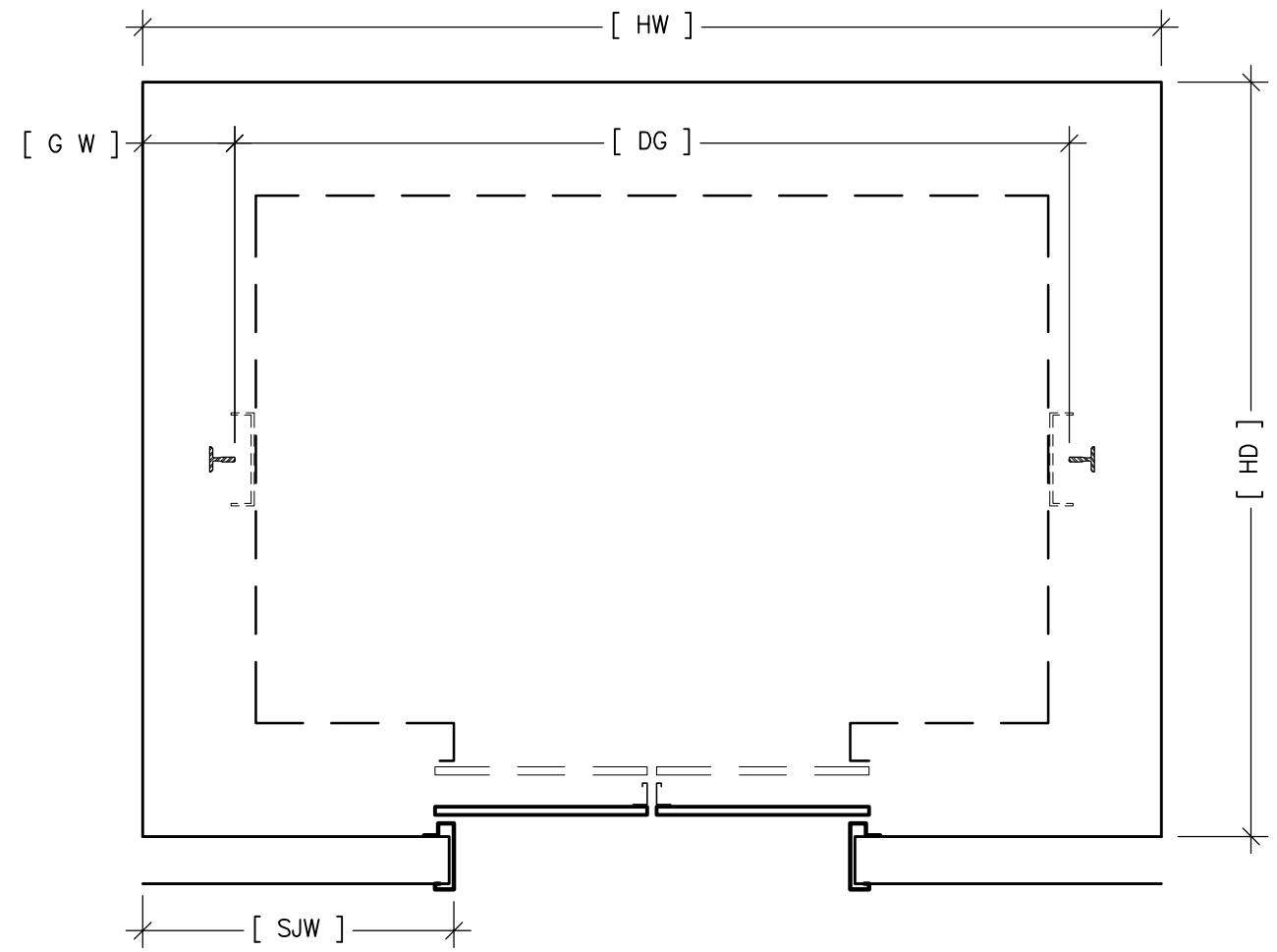

TRAVEL DISTANCES
(IF MORE THAN 12 PROVIDE TABLE)

TOTAL TRAVEL	
FLOOR DESIGNATION	FLOOR TO FLOOR HEIGHT
TOP	
PIT	

GENERAL SPECIFICATIONS AND DATA

JOB NAME:	
SHAFT NAME:	
DOOR OPERATOR:	GAL ☐ MAC ☐ OTIS ☐ OTHER ☐ _____

OPENING HEIGHT	[OH]	=	_____	HOISTWAY DEPTH	[HD]	=	_____
OPENING WIDTH	[OW]	=	_____	HOISTWAY WIDTH	[HW]	=	_____
JAMB TRIM	[JT]	=	_____	DISTANCE BETWEEN GUIDES	[DG]	=	_____
HEAD TRIM	[HT]	=	_____	GUIDE TO WALL	[GW]	=	_____
WALL THICKNESS	[WT]	=	_____	STRIKE JAMB TO WALL	[SJW]	=	_____
DOOR THICKNESS	[DT]	=	_____	DAYLIGHT	[DL]	=	_____

QUANTITY	KEY HOLE LOCATION (FROM HALL VIEW)		ENTRANCE/DOOR FINISH	
	LEFT H	RIGHT H	☐ BAKED ENAMEL	BAKED PRIME ☐
			☐ S/ST # 4	S/ST MIRROR ☐
			☐ BRONZE	OTHER ☐
HALL FIXTURES	YES ☐	DIM		
VISION GLASS	YES ☐	DIM		

SILL	ALUM. ☐	BRZ. ☐	S/ST ☐	WHT. BRZ (NICKEL SILVER) ☐

JAMB PROFILE

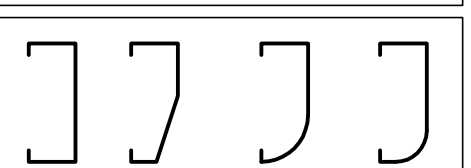

SQUARE ☐ SPLAY ☐ BULLNOSE ☐ RADIUS ☐

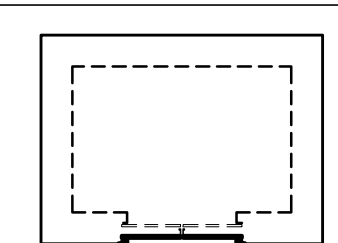

COLUMBIA ELEVATOR

ENTRANCE SURVEY

CENTER OPENING